ECE 1101L: Lab 3 – Parallel Resistors

Introduction: In this lab we arranged our resistors of different values in parallel instead of series. When you want to combine resistance of resistors that are parallel you multiply the resistor values on top then divide by the resistor values added. Our voltage was 8 volts and we used that to get current which is voltage divided by resistance. We got power by multiplying voltage by measured current and got deviation by Theory current minus Measured current divided by Theory current multiplied by 100. It is important to note that we did not have a 3.3kΩ resistor so we used a 3.9kΩ resistor instead.

Prelab:

1. Given

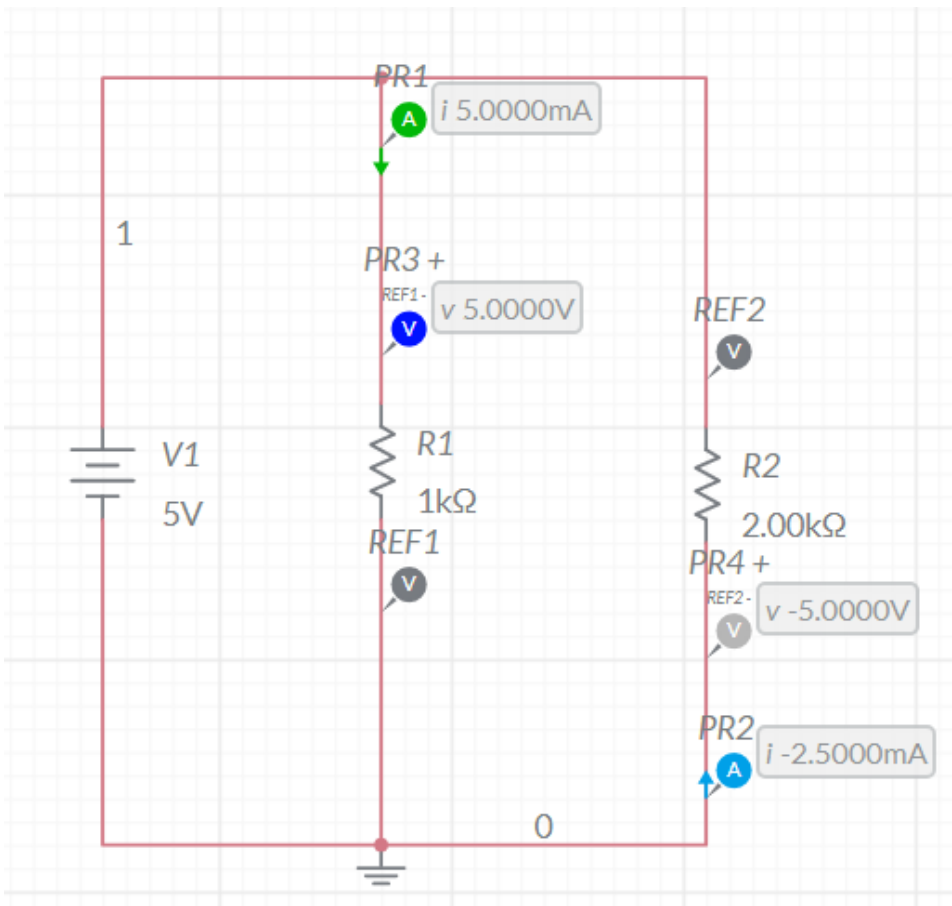

A. I1 = 5mA, I2 = -2.5mA, V1 = 5V, V2= -5V

B. PR1 in circuit above is meter for I1

C. PR2 in circuit above is meter for I2

2. Given

A. I1 = 3.33mA, I2 = -3.33mA, V1 = 3.3333V, V2 = 6.6667V

3. Given

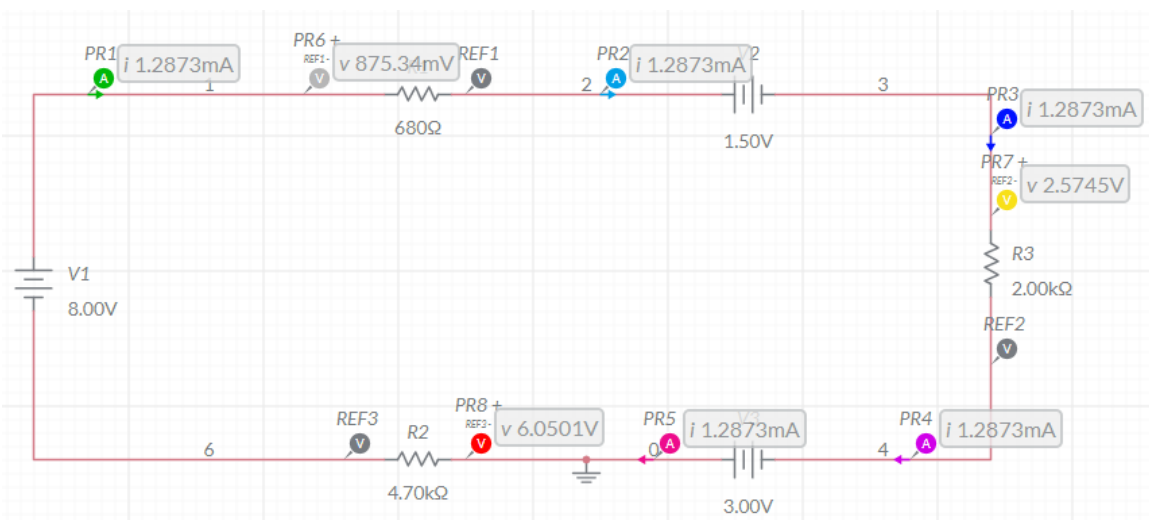

A. I1 = 1.2873mA, I2 = 1.2873mA, I3 = 1.2873mA, I4 = 1.2873mA, I5 = 1.2873mA, V1 = 0.87534V, V2 = 2.5745V, V3 = 6.0501V

4. Find the parallel equivalent resistance of

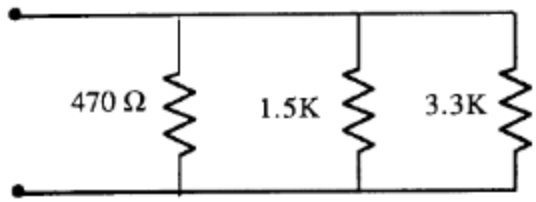

a. First, we do 1.5•3.3/1.5+3.3 and that equals 1.03125kΩ. Then we convert 470Ω to 0.47kΩ and now we can do 1.03125•0.47/1.03125+0.47= and that equals 0.322kΩ. So, our parallel equivalent resistance is 0.322kΩ or 322Ω.

5. Given

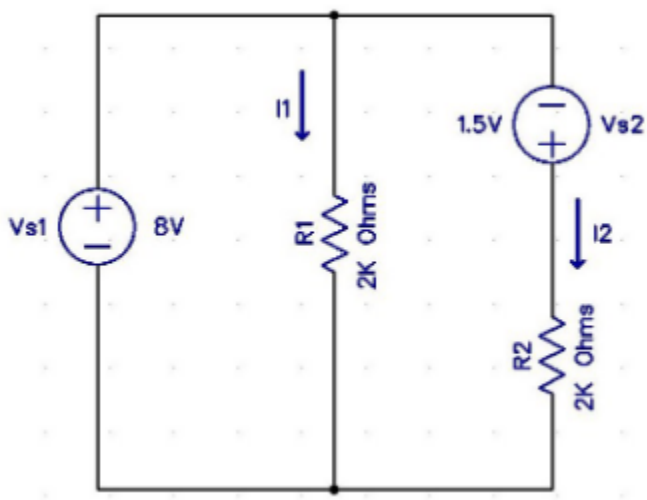

a. I1 = 4mA, V1 = 8V, I2 = 4.75mA, V2 = 9.5V

Experiment 1

Voltage	Theory	Measured
VA	8v	7.99v
VB	8v	7.82v
VC	8v	7.38v

Current	Theory	Measured	Deviation	Power
R1=0.98k	8mA	8.01mA	-0.13%	64.08W
R2=2.19k	3.63mA	3.61mA	0.55%	28.88W

Total	11.63mA	11.61mA	0.17%	92.88W
Total Resistance	0.6875kΩ	0.6825kΩ	0.73%	

Current	CDR Theory
R1	8.05mA
R2	3.66mA
Total	11.71mA

Explanation: First we got the theoretical voltages at point a, b, and c, which should all be 8v. Then we got the circuits total resistance by using parallel resistor rule and after that we measured it. We then used the power supply to be able to measure the voltages at point a, b, and c. We divided our voltage by our resistance values to get our theoretical currents. Then we measured the currents at the single points. Finally, we did our power dissipation and deviation to finish off our data.

Experiment 2

Current	Theory	Measured	Deviation	Power
R1	8mA	7.985mA	0.19%	63.88W
R2	3.63mA	3.53mA	2.75%	28.24W
R3	2.05mA	2.08mA	-1.46%	16.64W
R4	1.18mA	1.13mA	4.24%	9.04W
Total	14.86mA	14.765mA	0.64%	118.12W
Ix	3.32mA	3.21mA	3.31%	25.68W
Total Resistance	0.520kΩ	0.546kΩ	-5%	

Explanation: For this experiment we used four instead of two resistors. First, we got the theoretical current by dividing our voltage which is 8v by the different resistance values and then used the parallel resistor rule to get our total resistance. Our Ix was equal to the current added up of R3 and R4. We then measured our total resistance without the power supply. After that we plugged in our power supply and recorded our measured current values. We then did our deviation to see the difference in our theoretical and measured data. Lastly, we calculated power at each resistor.

Post-Lab: Determine the cause for each set of symptoms. Refer to Figure 1.

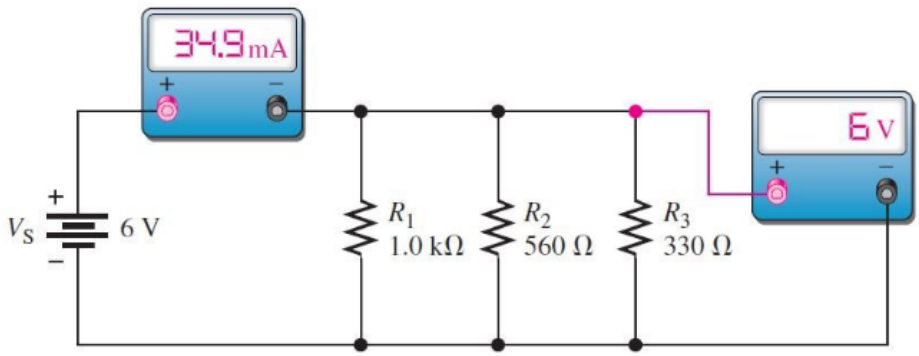

1. Symptom: The ammeter and voltmeter readings are zero.

Cause:

(a) R1 is open.

(b) The voltage source is turned off or faulty.

(c) R3 is open.

2. Symptom: The ammeter reading is 16.7 mA, and the voltmeter reading is 6 V.

Cause:

(a) R1 is open.

(b) R2 is open.

(c) R3 is open.

3. Symptom: The ammeter reading is 28.9 mA, and the voltmeter reading is 6 V.

Cause:

(a) R1 is open.

(b) R2 is open.

(c) R3 is open.

4. Symptom: The ammeter reading is 24.2 mA, and the voltmeter reading is 6 V.

Cause:

(a) R1 is open.

(b) R2 is open.

(c) R3 is open.

5. Symptom: The ammeter reading is 34.9 mA, and the voltmeter reading is 0 V.

Cause:

(a) A resistor is shorted.

(b) The voltmeter is faulty.

(c) The voltage source is turned off or faulty

Conclusion: In conclusion, we were able to confirm the parallel resistor rule we learned in the lecture class and actually be able to apply it within the circuits we built in this lab class. By being able to get our total resistance value we were able to get important data like total current. It was interesting to see how the data differed between a circuit with less resistors compared to a circuit with more resistors and of higher resistance.